# Plains & Pods

platform bench, 49in depth, metal, tall, 2 tables 2C, with skate stops

Product Drawing

Date: 04/10/2024
www.landscapeforms.com Ph: 800.521.2546

UNIT SHIPS WITH GLIDES INSTALLED. OPTIONAL SURFACE MOUNTING HARDWARE INCLUDED. REFER TO INSTALLATION GUIDE FOR MORE DETAILS.

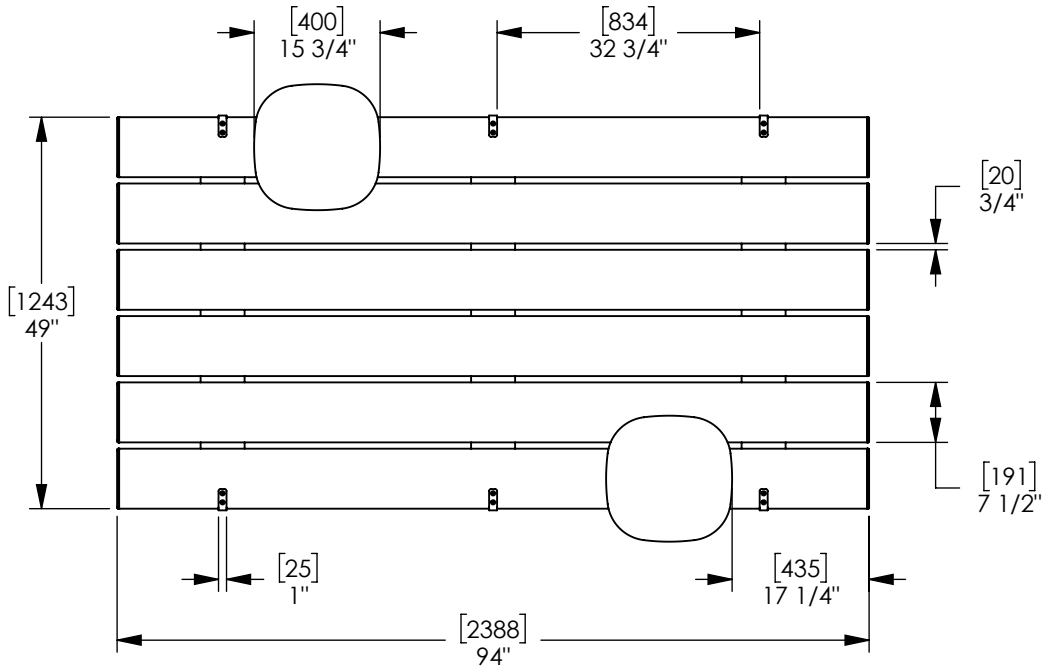


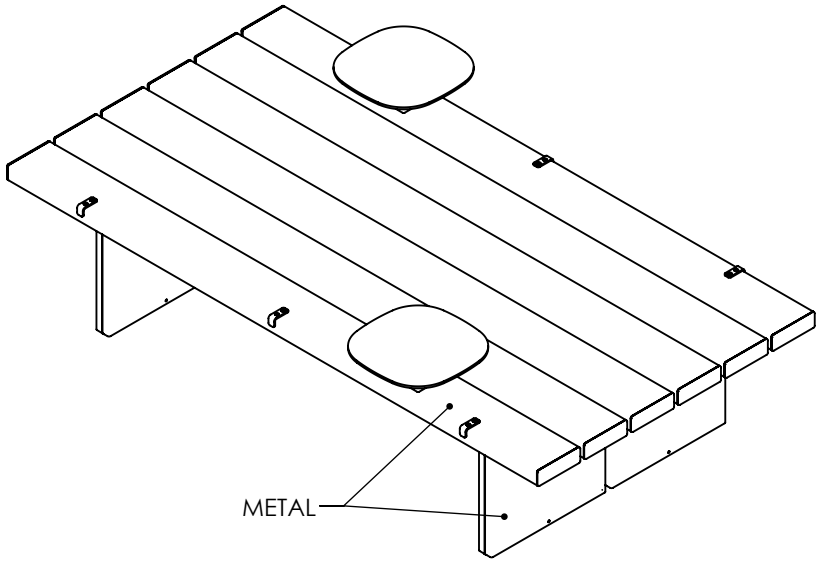


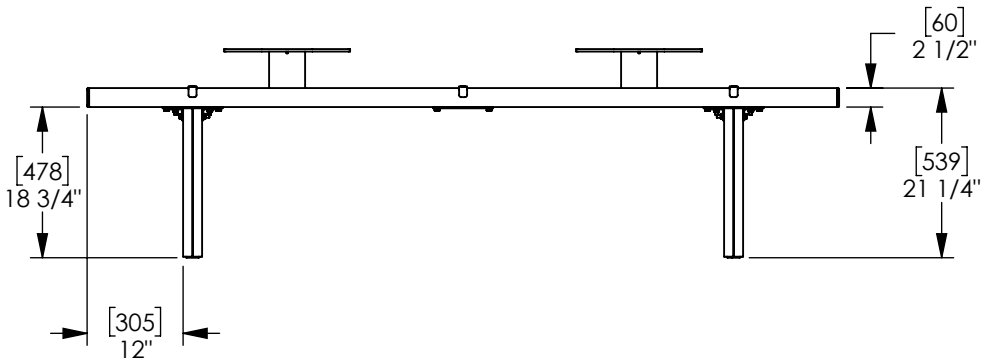


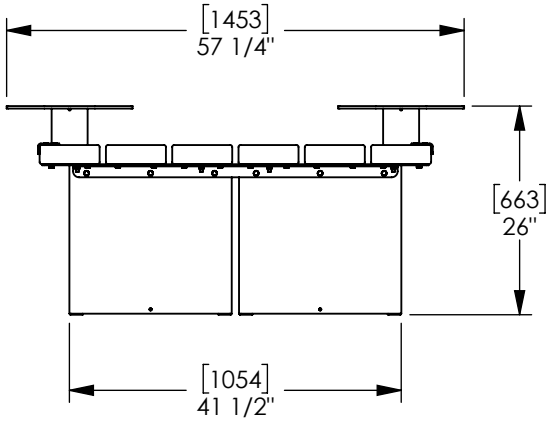


landscapeforms®

Drawing: DT0164
Dimensions are in inches [mm]

CONFIDENTIAL DRAWING INFORMATION CONTAINED HEREIN IS THE PROPERTY OF LANDSCAPE FORMS. INTENDED USE IS LIMITED TO DESIGN PROFESSIONALS SPECIFYING LANDSCAPE FORMS PRODUCTS AND THEIR DIRECT CLIENTS. DRAWING IS NOT TO BE COPIED OR DISCLOSED TO OTHERS WITHOUT THE CONSENT OF LANDSCAPE FORMS. © 2024 LANDSCAPE FORMS ALL RIGHTS RESERVED.